https://doi.org/10.17221/26/2020-RAE

Electronic nose sensor development using ANN backpropagation for Lombok Agarwood classification

*Farel Ahadyatulakbar Aditama[1], Lalu Zulfikri[1], Laili Mardiana[1], Tri Mulyaningsih[2], Nurul Qomariyah[1], Rahadi Wirawan[1]**

[1]*Department of Physics, Faculty of Mathematics and Natural Sciences, University of Mataram, Mataram, Indonesia*

[2]*Department of Biology, Faculty of Mathematics and Natural Sciences, University of Mataram, Mataram, Indonesia*

**Corresponding author: rwirawan@unram.ac.id*

Citation: Aditama F.A., Zulfikri L., Mardiana L., Mulyaningsih T., Qomariyah N., Wirawan R. (2020): Electronic nose sensor development using ANN backpropagation for Lombok Agarwood classification. Res. Agr. Eng., 66: 97–103.

Abstract: The aim of the present study is the development of an electronic nose system prototype for the classification of *Gyrinops versteegii* agarwood. The prototype consists of three gas sensors, i.e., TGS822, TGS2620, and TGS2610. The data acquisition and quality classification of the nose system are controlled by the Artificial Neural Network backpropagation algorithm in the Arduino Mega2650 microcontroller module. The testing result shows that an electronic nose can distinguish the quality of Gyrinops versteegii agarwood. The good-quality agarwood has an output of [1 −1], while the poor-quality agarwood has an output of [−1 1].

Keywords: prototype; gas sensor; arduino; quality; *Gyrinops versteegii*

Agarwood is a timber product that has a unique aroma with a high resin content (Subasinghe, Hettiarachchi 2013). Generally, agarwood originates from wounds to trees of the genus *Aquilaria* and *Gyrinops* (Family: Thymelaeaceae) (Lee, Mohamed 2016). Due to its unique aroma, agarwood is often used as a fragrance for religious activities and perfumes (Jung 2013; Jayachandran et al. 2014). In addition, agarwood also has the potential to be utilised for medical and cosmetic purposes (Hashim et al. 2016; Adam et al. 2017). The diversity of the benefits of aloes makes it have a high economic value.

The classification of agarwood can be determined based on several parameters which are the colour, shape and aroma (Ismail et al. 2014, 2015; Liu et al. 2017). The aroma is a parameter influenced by the content of the agarwood resin. A good quality agarwood has a high resin content (Azah et al. 2013). Generally, the conventional methods of determining the agarwood's quality utilises the human sense of smell, i.e., the nose. On the other hand, the nose has limitations and the accuracy of the smell, which depends on the physical and mental condition and the results obtained are subjective (Ismail et al. 2014).

Several methods can be applied to identify the resin content in agarwood such as Gas Chromatography-Mass Spectrometry, Gas Chromatography-olfactometry, solid-phase micro-extraction and an electronic nose (Pripdeevech et al. 2011; Hashim et al. 2014; Lias et al. 2015, 2016; Ahmaed et al. 2017). The application of an electronic nose is more affordable because it is low-cost, has small dimensions and a low power consumption. One of the methods utilises Metal-Oxide Semiconductors resistive gas sensors which have advantages in the monitoring and analysis by detecting various types of gas. This sensor works based on the resistivity value of the sensor material due to the chemical reactions with gas molecules (Figaro 2000). Recent studies reported the use of an electronic nose in observing physiochemical

https://doi.org/10.17221/6/2020-RAE

properties of bananas in different seasons (Dou et al. 2020), detecting the quality of a wine (Gamboa et al. 2019), and monitoring the evaluation of agricultural and food products (Ali et al. 2020).

Advances in sensor technology, instrumentation and decision-making methods (artificial intelligence) make it possible to develop an electronic nose device that is able to classify various scents objectively (Lias et al. 2015, 2016) and can be used to standardise a material numerically (Borah et al. 2008). Considering the descriptions that have been disclosed, in this study we developed a simple portable low-cost of electronic nose system to classify the Lombok agarwood (*Gyrinops versteegii*) quality by applying a backpropagation Artificial Neural Network (ANN) training algorithm.

MATERIAL AND METHODS

In this study, a developed prototype of an electronic nose system for the classification of agarwood was made, which combines a resistive gas sensor system and an ANN system. The developed electronic nose system is depicted in the block diagram shown in Figure 1. The sensor system functions as an acquisition device that measures the target gas concentration based on the Analogue-to-Digital Converter (ADC) value which is read by the sensor. The gas sensor system is composed of three sensor types that are TGS822, TGS2620, and TGS2610. Meanwhile, the ANN system function processes information on the ADC value into outcomes in the form of the agarwood quality.

The first step of the electronic nose system testing uses alcohol solutions with different concentrations and a technical benzene solution as a gas sample in order to observe the response time graphs of each sensor based on our previous research (Zulfikri et al. 2018).

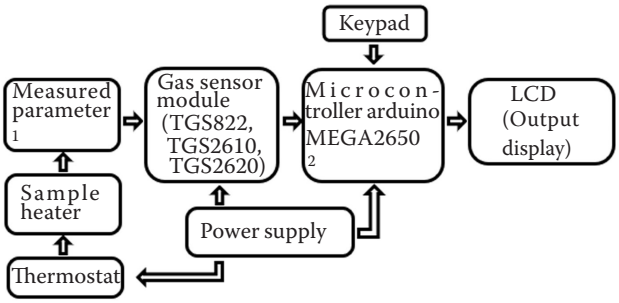

Figure 1 . Block diagram of the developed electronic nose

[1]Gas/vapour; [2]ANN program

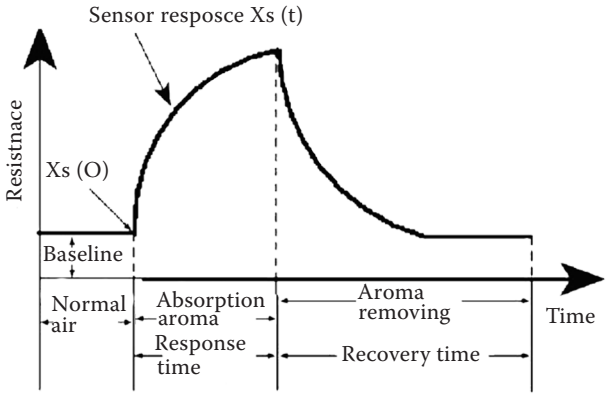

Figure 2 . The response graph of a gas sensor to an aroma (Arshak et al. 2004)

In this testing, the used alcohol solutions' concentration is 75, 80, 85, and 90%. A data acquisition result in the form of a recorded ADC value graph of each sensor is compared to the response time graph (Figure 2) to determine the sensor detection capability.

The next step of testing is to observe how the system can recognise the gas contained in random samples of agarwood and can be classified as good-quality or poor-quality agarwood. The *G. versteegii* agarwood samples are placed in the sample chamber and heated to produce a gas vapour. The maximum temperature of the chamber is set to 62 °C on the thermostat. The acquisition of the ADC value from three sensors is processed using backpropagation ANN training algorithm (Figure 3A) with a network architecture as shown in Figure 3B.

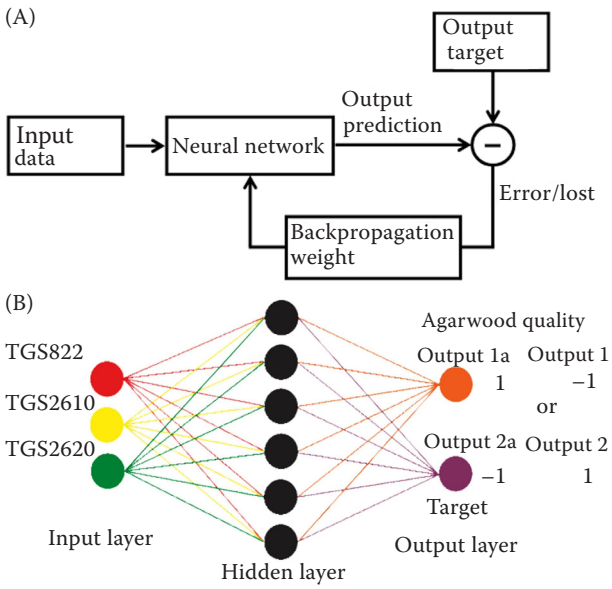

Figure 3 . (A) ANN training (Sena 2017) and (B) ANN architecture for the agarwood quality classification

https://doi.org/10.17221/26/2020-RAE

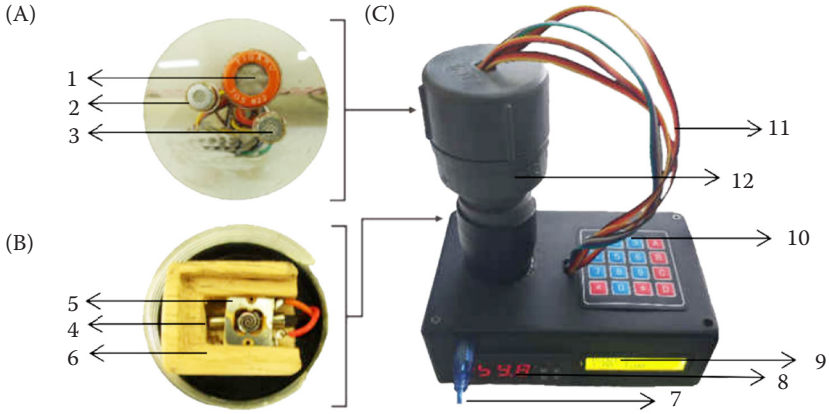

Figure 4. (A) Gas sensor array, (B) heating system and (C) prototype of the electronic nose system

1 – TGS822; 2 – TGS2620; 3 – TGS2610; 4 – temperature sensor; 5 – heater element; 6 – sample plate; 7 – downloader wire; 8 – thermostat; 9 – LCD; 10 – keypad; 11 – sensor wire; 12 – tube

The ANN training process is carried out based on the pattern of the differences in the value of the ADC between the good and poor agarwood quality. The expected output is a transformation matrix that defines the quality, i.e., good-quality is defined as [1 –1] and poor-quality is defined as [–1 1] (Prasetyo 2014). The results of the ANN training will be implanted into an Arduino Mega2650 module as an ANN agarwood classification control program.

Figure 4 shows a prototype of an electronic nose system that has been built in this research. The system consists of three sensors (Figure 4A), an agarwood sample heater (Figure 4B), and a data acquisition and quality classification system (Figure 4C). The data acquisition and quality classification are controlled by the programmed ANN in the Arduino Mega2650 module. Sensors in the tube that detect the vapour (alcohol gas vapour and benzene or agarwood samples) form the working mechanism of the electronic nose. The vapour will cause a decrease in the resistivity value of the gas sensor so that it causes an increase in the value of the ADC sensors. So, the existence of an aroma from a small piece of heated agarwood sample causes the ADC value of the sensor to increase. The ADC value is a maximum value that can be read-out by the sensor and indicates the level of sensitivity of the sensor on the detected target aroma. Furthermore, the ADC values are used as the input to the ANN program to produce an output value which is displayed on an LCD module.

RESULTS AND DISCUSSION

The response of the three sensors in the electronic nose system to the alcohol solutions and benzene are shown in figure 5. The sensor response is displayed in a graphical form between the ADC value and the ADC sampling time. The graph in Figure 5 shows the different responses for each graph. In the sensor response graphs of TGS822 and TGS2610 (Figure 5A and B), it can be seen that the difference in the ADC value in each alcohol concentration is less significant. These results indicate that the gas sensors are less sensitive to changes in the gas concentration. Whereas, in Figure 5C, the graph of the response time of the TGS2620 sensor clearly shows visible differences in the ADC value for each concentration, and this indicates that the TGS2620 sensor is very good in detecting the alcohol gas.

Meanwhile, the TGS822 sensor has a long recovery time compared to the TGS2620 and TGS2610 sensors in detecting benzene gas as shown in the sensor response time graph (Figure 6). The results reveal that the TGS822 sensor has the ability to detect the benzene compound's existence better than the TGS2610 and TGS2620 sensors.

The difference in the sensors' response to the target gas is caused by the different sensing elements and the additional electronic circuits in the working sensor. As it is known that the TGS822 sensor uses a tin dioxide (SnO_2) semiconductor sensing element which is highly sensitive to organic solvent vapours, such as ethanol (CH_3CH_2OH), benzene (C_6H_6), n-Hexane (C_6H_{14}) and acetone (C_3H_6O). Meanwhile, the TGS2610 and TGS2620 sensors use the same sensing elements, i.e., a metal-oxide semiconductor layer on an alumina substrate and an integrated heater circuit with a characteristic current of about 56 mA and 43 mA, respectively. The TGS2610 sensor can detect iso-butane (C_4H_{10}) and propane (C_3H_8) accurately. On the other hand, the TGS2620 sensor is highly sensitive to alcohol and organic solvent vapours, such as ethanol (CH_3CH_2OH) (Figaro 2000). This characteristic can be observed in the test results revealed in Figure 5 and 6.

https://doi.org/10.17221/6/2020-RAE

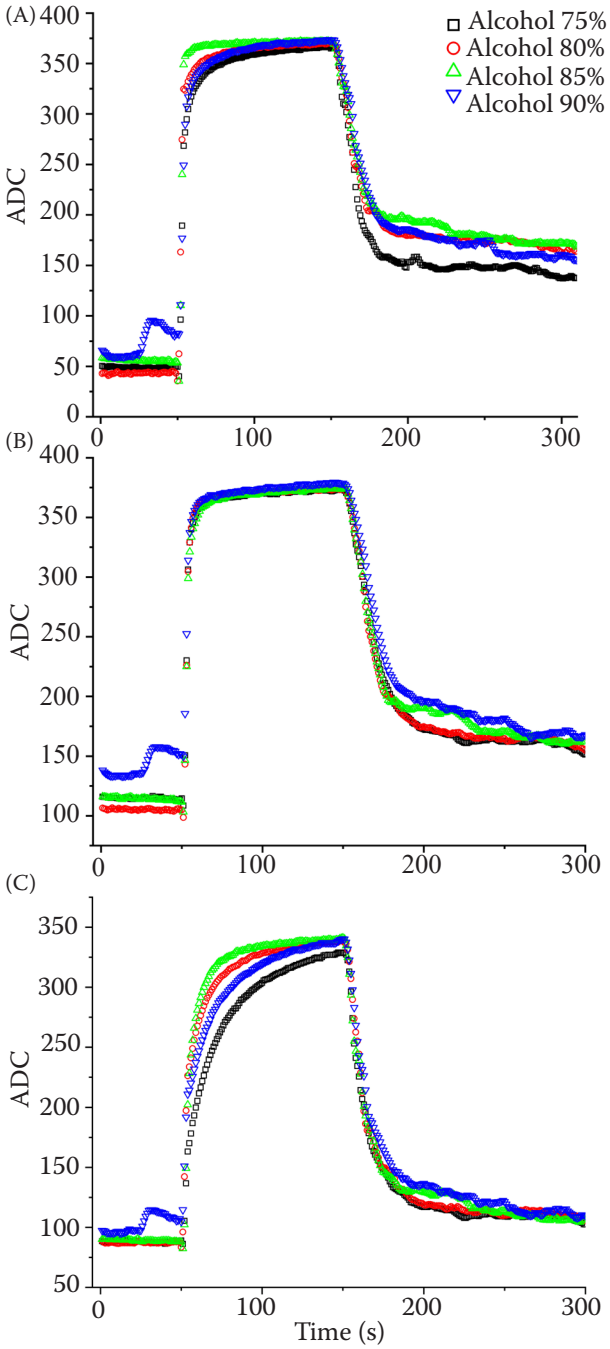

Figure 5. Sensor response time to alcohol for (A) TGS822, (B) TGS2610, and (C) TGS2620

ACD – analogue-to-digital converter

Moreover, the *G. versteegii* agarwood contains important substances that make its aroma highly fragrant. The chemical compounds of the volatile agarwood are Chromones, Guaiacol, and Furfuryl alcohol, and Benzylacetone (Aqmarina et al. 2019). Therefore, generally, this agarwood vapour can be detected by the three sensors with a gas content in the form of benzene, alcohol, and iso-butane.

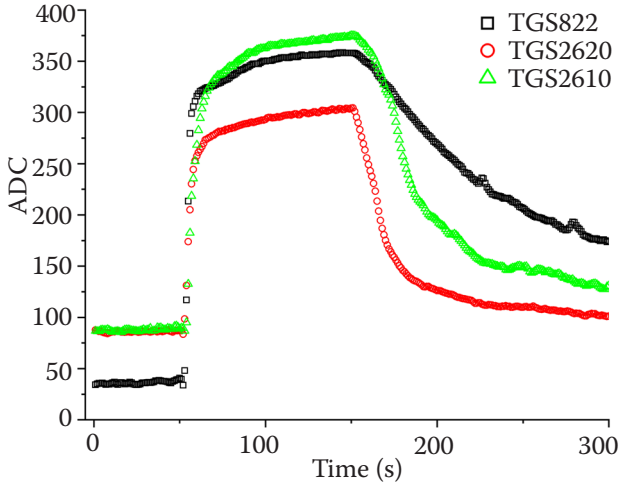

Figure 6. Time response of the TGS822, TGS2610 and TGS2620 sensors to the technical benzene

ACD – analogue-to-digital converter

Electronic nose response to the aroma of agarwood. In the measurement of the ADC values of the good- and poor-quality agarwood samples, there is a difference in the sensor response of each aroma which can be observed in the different ADC values recorded, especially for the maximum value at the response time state. This difference is used as a pattern to train the electronic nose in order to recognise the aroma of each type of agarwood. In Figure 7, it can be observed that the good-quality agarwood has a faster ADC read-out time than the poor-quality agarwood. This difference is due to the differences in the resin content in the sample which can affect the rate of reading the ADC. The higher the resin content in an aloes sample is, the faster the ADC reaches its maximum value.

Electronic nose testing results. The electronic nose displays the output every 1 000 ms that is specified in the program. In the condition of an ADC value of the TGS822 sensor below 40, it indicates that the sensor is not in normal conditions. Therefore, the electronic nose will display the output of a "weak signal". The test results for the three aromas of the Gyrinops versteegii agarwood showed that the electronic nose needed time to be able to accurately recognise the agarwood aroma of the sample. This happens because the data used are the maximum ADC values, which takes more time to achieve the maximum value.

The difference in the ADC values from the good- and poor-quality agarwood is used as the main parameter for the ANN training patterns. In classifying

https://doi.org/10.17221/26/2020-RAE

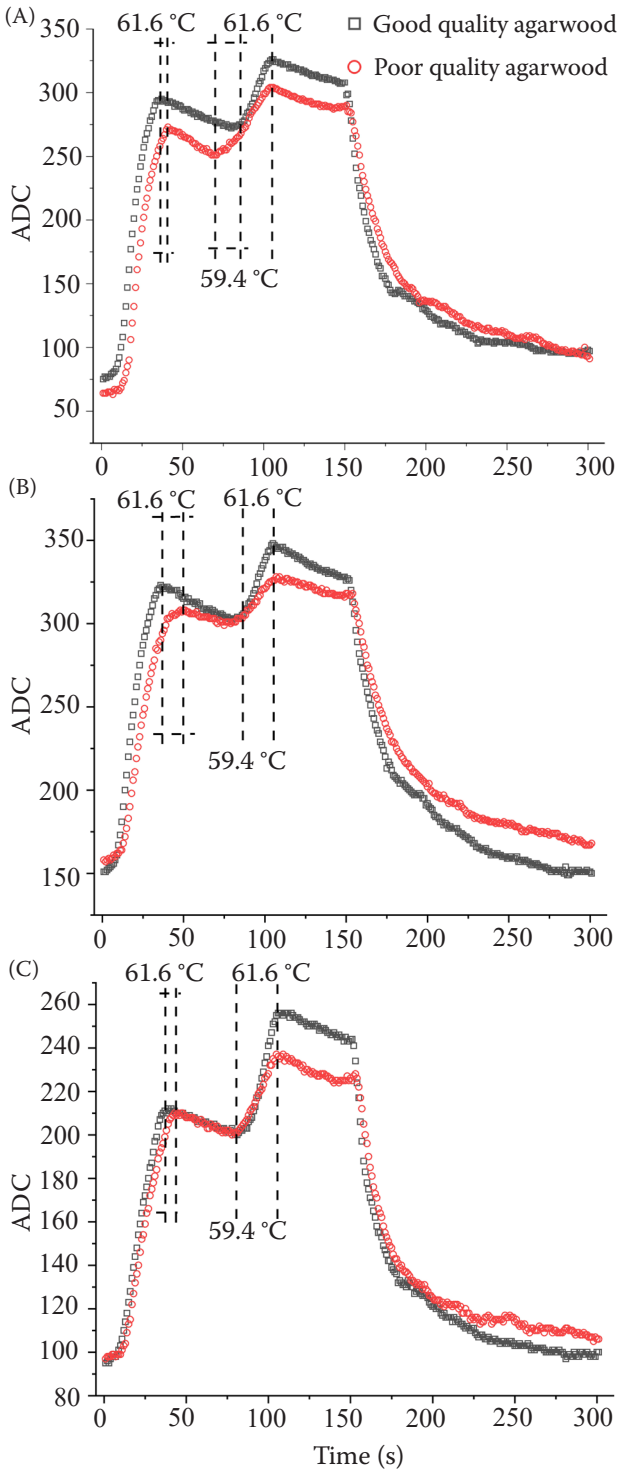

Figure 7 . The response time of the good-quality agarwood and poor-quality agarwood on the (A) TGS822, (B) TGS2610 and (C) TGS2620 sensors

ACD – analogue-to-digital converter

the agarwood quality, an ANN architecture was performed using a multilayer perceptron (MLP), i.e., an input layer with three neurons (the ADC values of the three sensors), a hidden layer, and an output layer. The difference in the quality of the agarwood in two types is based on a combination of two neuron outputs. The value of the output neuron is in the range of –1 to 1 and adjusted using a tangent sigmoid transfer function. According to the number of input and output neurons, there are six neurons which are used in the hidden layer as the connecting neuron, resulting in an accurate output classification.

Training the neural network is based on back-propagation methods using the MATLAB program (version R2015a) which generates the connecting weights of each neuron (Figure 3B) used as the multipliers for the output target and also for the identity of the agarwood quality in each neuron. In this training, the weight value that fulfils the requirement output with a 0.001 error setup value is obtained after 47 626 iterations (looping). In the last iteration, the training process reaches a linearity of R ≈ 1, and the ANN has been able to recognise the target well. The output matrix produced by two output neurons describes the quality of the sample.

Table 1 shows the results of the electronic nose testing in classifying both the *G. versteegii* agarwood samples. The good-quality agarwood is represented

Table 1. The testing result of electronic nose system for the samples of the agarwood aroma

Agarwood quality samples	Target data	
	output [0]	output [1]
Sample 1	1	–1
Sample 2	1	–1
Sample 3	1	–1
Sample 4	1	–1
Sample 5	1	1
Sample 6	1	–1
Sample 7	1	–1
Sample 8	1	–1
Sample 9	1	–1
Sample 10	1	–1
Sample 11	–1	1
Sample 12	–1	1
Sample 13	–1	1
Sample 14	–1	1
Sample 15	–1	1
Sample 16	–1	1
Sample 17	–1	1
Sample 18	–1	1
Sample 19	–1	1
Sample 20	–1	1

https://doi.org/10.17221/6/2020-RAE

by the samples numbered 1 through 10 with an output of [1 –1], while the poor-quality agarwood is represented by the samples numbered 11 through 20 with an output of [–1 1]. The developed electronic nose has successfully distinguished the quality of the used agarwood samples based on recognising and discriminating the aroma. The use of three specific type sensors in the electronic nose for certain purposes is quite simple when compared to commercial electronic noses such as the FOX4000 E-Nose with 18 sensors (Lias 2015, 2016). The use of an appropriate ANN classification method can optimise electronic noses in distinguishing the agarwood quality.

CONCLUSION

A simple electronic nose system using TGS822, TGS2610, TGS2620 sensors and a backpropagation algorithm of an artificial neural network successfully developed for the *G. versteegii* Lombok agarwood classification. The electronic nose system can distinguish the quality of the agarwood based on the classification output of the artificial neural networks. The good-quality agarwood has a classification output of [1 –1], while the poor-quality agarwood has a classification output of [–1 1].

Acknowledgement: We are grateful to the Faculty of Mathematics and Natural Science, University of Mataram for the support in this research.

REFERENCES

Adam A.Z., Lee S.Y., Mohamed R. (2017): Pharmacological properties of agarwood tea derived from *Aquilaria* (Thymelaeaceae) leaves: an emerging contemporary herbal drink. Journal of Herbal Medicine, 10: 37–44.

Ahmaed D.T., Mohammed M., Masaad A.M., Tajuddin S.N. (2017): Investigation of agarwood compounds in *Aquilaria malaccensis* & *Aquilaria rostrata* chipwood by using solid phase microextraction. Biomedical Journal of Scientific & Technical Research, 1: 1–8.

Ali M.M., Hashim N., Aziz A.S., Lasekan O. (2020): Principles and recent advances in electronic nose for quality inspection of agricultural and food products. Trends in Food Science & Technology, 99: 1–10.

Arshak K., Moore E., Lyons G.M, Harris F., Clifford S. (2004): A review of gas sensors employed in electronic nose applications. Sensor Review, 24: 181–198.

Azah M.A.N., Husni S.S., Mailina J., Sahrim L., Majid J.A., Faridz Z.M. (2013): Classification of agarwood (gaharu) by sesin content. Journal of Tropical Forest Science, 25: 213–219.

Borah S., Hines E.L., Leeson M.S., Iliescu D.D., Bhuyan M., Gardner J.W. (2008): Neural network based electronic nose for classification of tea aroma. Sensing and Instrumentation for Food Quality and Safety, 2: 7–14.

Dou T.X., Shi J.F., Li Y., Bi F.C., Gao H.J., Hu C.H., Li C.Y., Yang Q.S., Deng G.M., Sheng O., He W.D., Yi G.J., Dong T. (2020): Influence of harvest season on volatile aroma constituents of two banana cultivars by electronic nose and HS-SPME coupled with GC-MS. Scientia Horticulturae, 265: 1–7.

Figaro (2000): Operating Principle of MOS Type, Figaro Engineering Inc., Japan., Available at https://www.figaro.co.jp/en/product/sensor/ (accessed Dec 4, 2019).

Gamboa J.C.R., Albarracin E.E.S., da Silva A.J., Ferreira T.A.E. (2019): Electronic nose dataset for detection of wine spoilage thresholds. Data in Brief, 25: 1–6.

Hashim Y.Z.H-Y., Ismail N.I., Abbas P. (2014): Analysis of chemical compounds of agarwood oil from different species by gas chromatography mass spectrometry (GCMS). IIUM Engineering Journal, 15: 55–60.

Hashim Y.Z.H.-Y., Kerr P.G., Abbas P., Salleh H.M. (2016): *Aquilaria* spp. (agarwood) as source of health beneficial compounds: A review of traditional use, phytochemistry and pharmacology. Journal of Ethnopharmacology, 189: 331–360.

Ismail N., Ali N.A.M., Jamil M., Rahiman M.H.F., Tajuddin S.N., Taib M.N. (2014): A review study of agarwood oil and its quality analysis. Jurnal Teknologi, 68: 37–42.

Ismail N., Rahiman M.H.F., Taib M.N., Ibrahim M., Zareen S., Tajuddin S.N. (2015): A Review on agarwood and its quality determination. 2015 IEEE 6th Control and System Graduate Research Colloquium (ICSGRC). Shah Alam, Aug 10–11, 2015: 103–108.

Jayachandran K., Sekar I., Parthiban K.T., Amirtham D., Suresh K.K. (2014): Analysis of different of Agarwood (*Aquilaria malaccensis* Lamk.) oil through GC-MS. Indian Journal of Natural Priducts and Resources, 5: 44–47.

Jung D. (2013): The cultural biography of agarwood – perfumery in eastern asia and the asian neighbourhood. Journal of the Royal Asiatic Society, 23: 103–125.

Lee S.Y., Mohamed R. (2016): The origin and domestication of *Aquilaria*, an important agarwood-producing genus. In: Agarwood Science Behind the Fragrance. Singapore, Springer Nature.

Lias S., Ali N.A.M., Jamil M., Zainal M.H., Ghani S.H.A. (2015): Classification of pure and mixture agarwood oils by electronic nose and discriminant factorial analysis (DFA). 2015 International Conference on Smart Sensors and Application (ICSSA). Kuala Lumpur, May 26–28, 2015: 7–10.

Lias S., Ali N.A.M., Jamil M., Jalil A.M., Othman M.F. (2016): Discrimination of pure and mixture agarwood oils via

https://doi.org/10.17221/26/2020-RAE

electronic nose coupled with k-nn kfold classifier. Procedia Cemistry, 20: 63–68.

Liu Y.Y, Wei J.H., Gao Z.H., Zhang Z., Lyu J.C. (2017): A review of quality assessment and grading for agarwood. Chinese Herbal Medicines, 9: 22–30.

Aqmarina N.A., Siregar U.J., Miftahudin T.M. (2020): Identification of chemical compounds in agarwood-producing species *Aquilaria malaccensis* and *Gyrinops versteegii*. Journal of Forestry Research, 31: 1371–1380.

Prasetyo E. (2014): Data Mining, Mengolah Data Menjadi Informasi Menggunakan Matlab. Yogyakarta, Andi Offset.

Pripdeevech P., Khummueng W., Park S.K. (2011): Identification of odor-active components of agarwood essential oils from Thailand by solid phase microextraction-GC/MS and GC-O. Journal of Essential Oil Research, 23: 46–53.

Sena, S. (2017): Pengenalan Deep Learning Part 3: BackPropagation Algorithm. Available at https://medium.com/@samuelsena (accessed Apr 14, 2020).

Subasinghe S.M.C.U.P., Hettiarachchi D.S. (2013): Agarwood resin production and resin quality of *Gyrinops walla* Gaertn. International Journal of Agricultural Sciences, 3: 357–262.

Zulfikri L., Mardiana L., Wirawan R., Qomariyah N., Hadi K.A. (2018): Sistem Deteksi Gas Sederhana untuk Klasifikasi Gaharu Berbasis Sensor Gas Resistif. Prosiding SKF 2018, Bandung, Dec 4, 2018: 69–74.

Received: May 6, 2020
Accepted: July 28, 2020
Published online: September 28, 2020